LC-5500(BELT)
EXERCISE BIKE

GE09-00030-0100

SN: 634409 - up

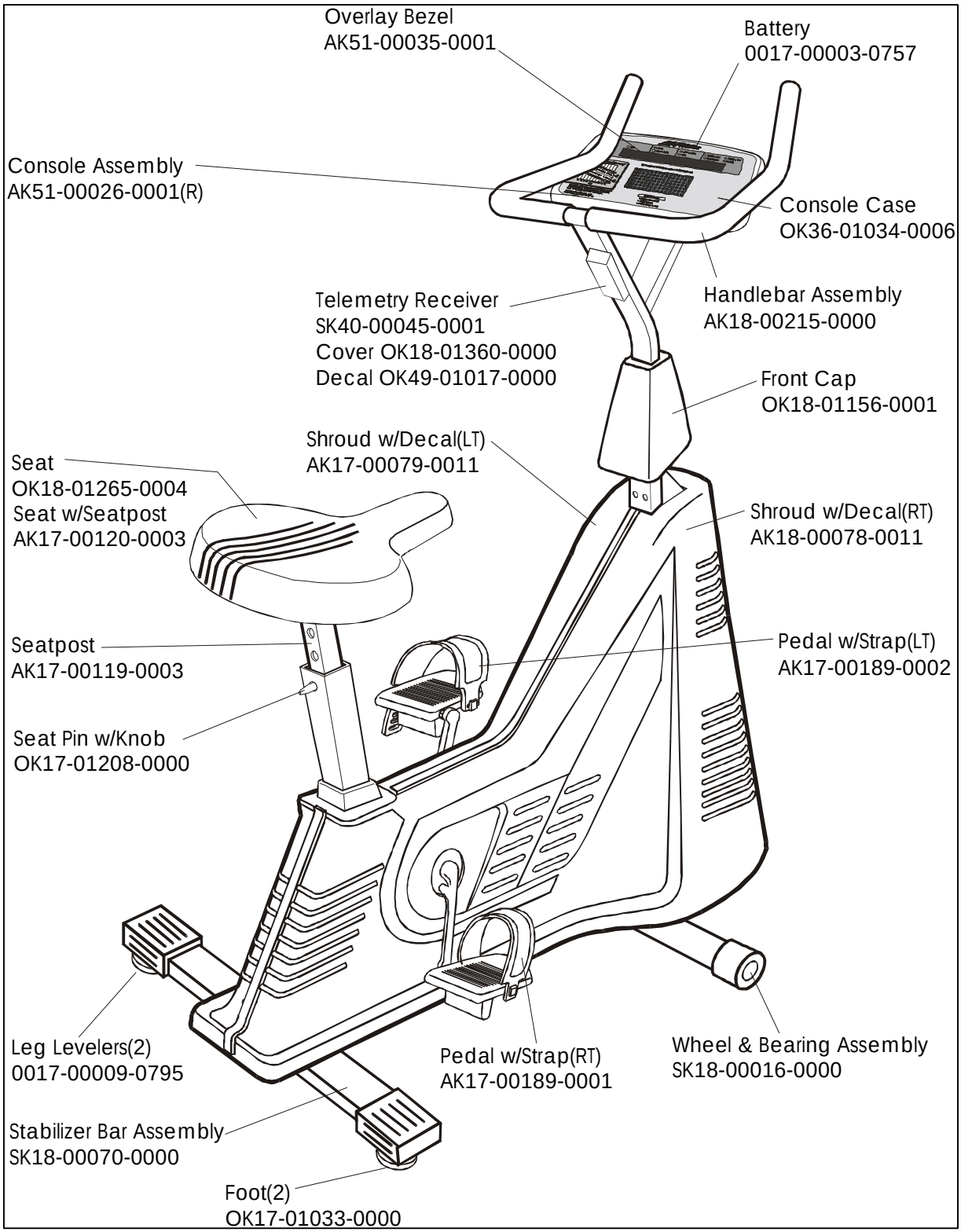

Revision Date: 12/28/98

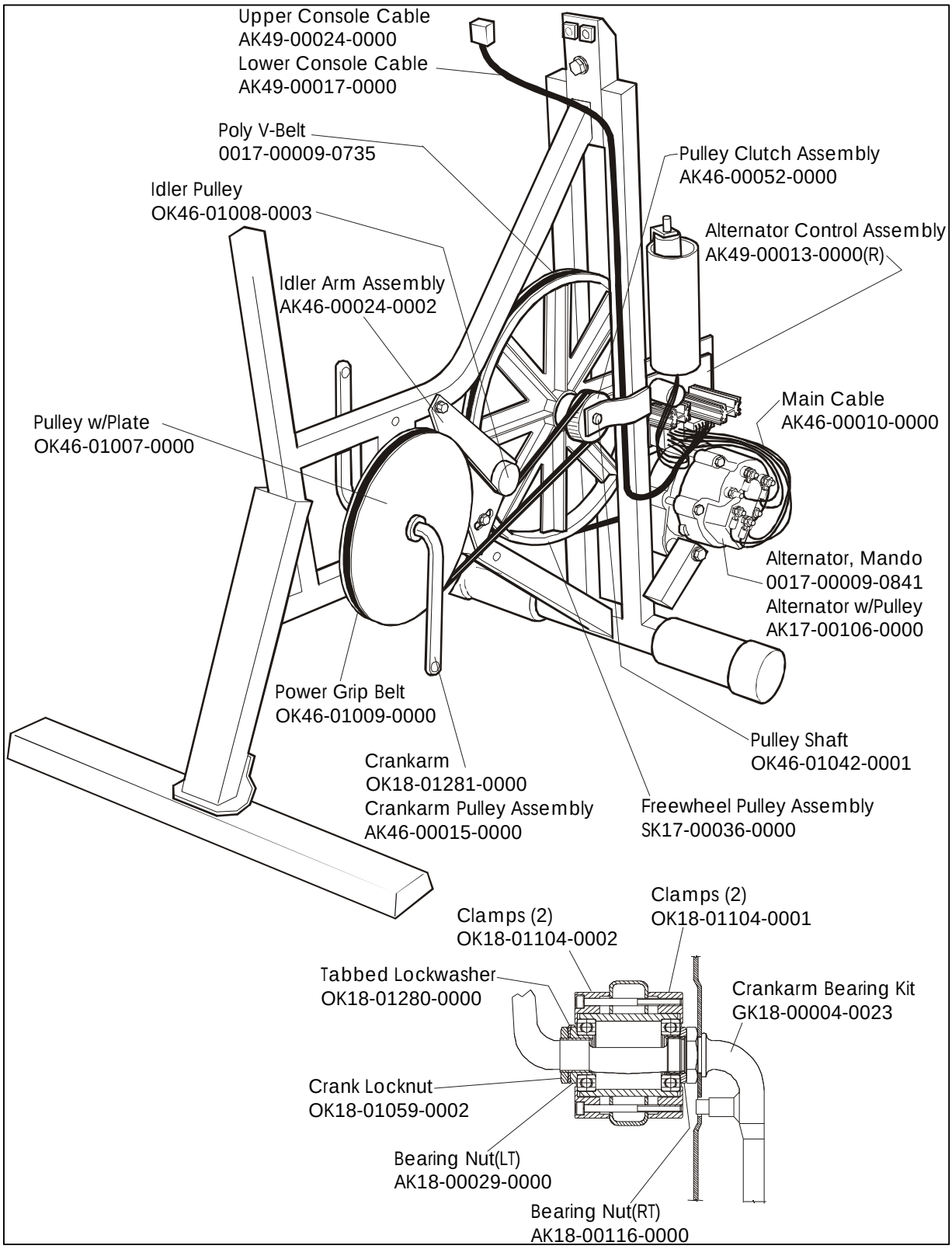
Upper Console Cable
AK49-00024-0000
Lower Console Cable
AK49-00017-0000
Poly V-Belt
0017-00009-0735
Idler Pulley
OK46-01008-0003
Idler Arm Assembly
AK46-00024-0002
Pulley w/Plate
OK46-01007-0000
Pulley Clutch Assembly
AK46-00052-0000
Alternator Control Assembly
AK49-00013-0000(R)
Main Cable
AK46-00010-0000
Alternator, Mando
0017-00009-0841
Alternator w/Pulley
AK17-00106-0000
Power Grip Belt
OK46-01009-0000
Crankarm
OK18-01281-0000
Crankarm Pulley Assembly
AK46-00015-0000
Pulley Shaft
OK46-01042-0001
Freewheel Pulley Assembly
SK17-00036-0000
Clamps (2)
OK18-01104-0002
Clamps (2)
OK18-01104-0001
Tabbed Lockwasher
OK18-01280-0000
Crankarm Bearing Kit
GK18-00004-0023
Crank Locknut
OK18-01059-0002
Bearing Nut(LT)
AK18-00029-0000
Bearing Nut(RT)
AK18-00116-0000